MARINE DIESEL ENGINES

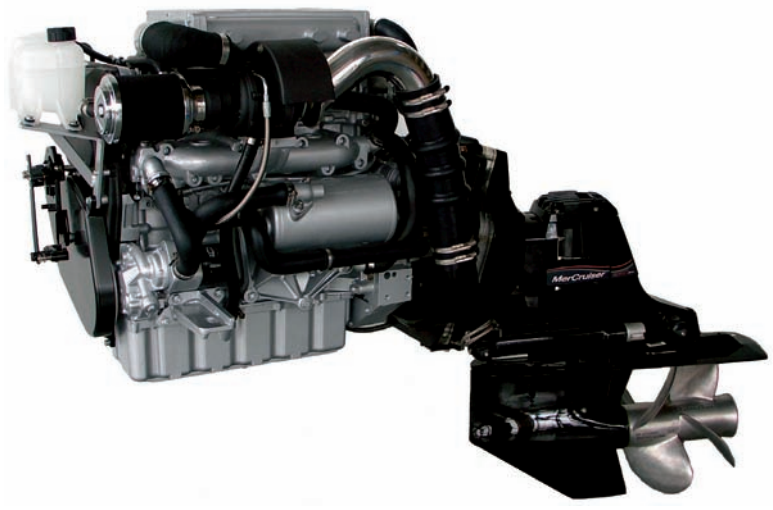

FNM HPEP 250

Configuration	4-stroke cycle, twin camshaft, 20 V
Maximum output at crankshaft	184 kW/250 hp at 4200 rpm
Maximum output at propeller	177 kW/241 hp at 4200 rpm
Maximum torque	460 Nm a 2600 giri/min.
Displacement	2.387 c.c.
Bore x stroke	82 x 90,4 mm
Cylinders	5, in-line
Combustion system	Direct injection Common Rail
Aspiration	Supercharged with variable geometry turbine
Starting system	Electric starting 12 V – 2,1 kW
Alternator	12 V – 105 A
Cooling system	Double water cooling system with heat exchanger
Lubrication system	Totally enclosed, forced lubricating system with pump
Max. mounting inclination	14°
Dry weight without stern drive	290 kg
Environmental	RCD 2003/44/CE ed EPA TIER 2
Engine mounting	Rubber type anti-vibration mounting

Power according ISO 8665, tolerance 5%, Diesel fuel according EN 590

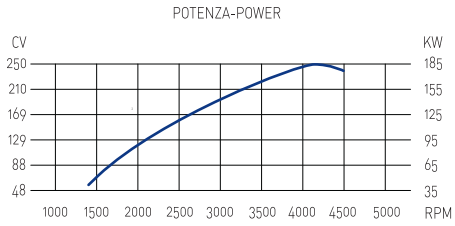

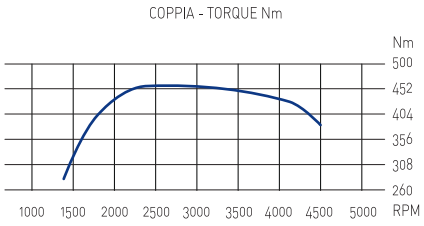

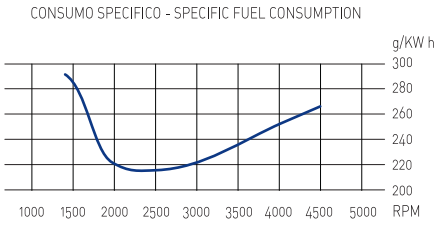

Dimensions (For detailed line-drawings, please refer to our website www.fnm-marine.com or contact your supplier)

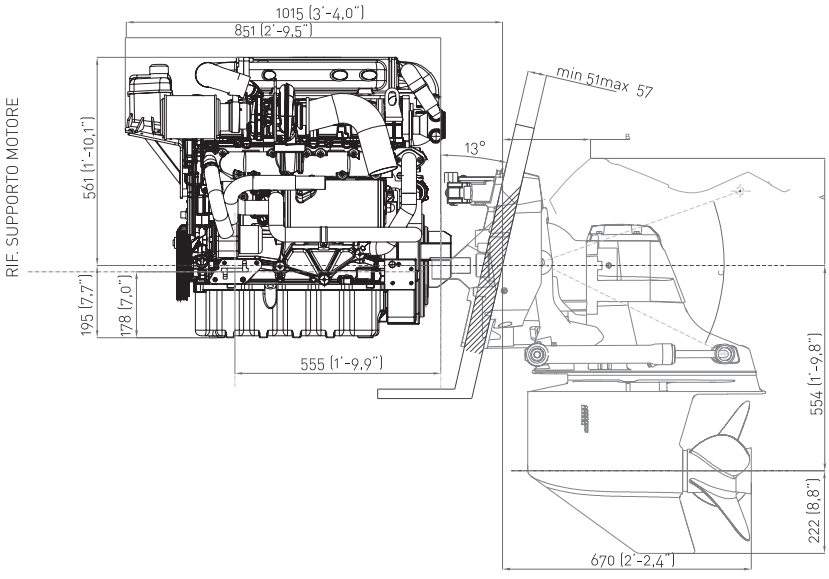

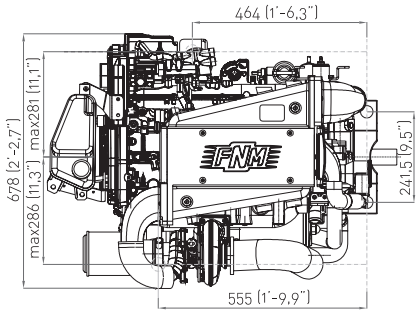

EXHAUST RISER DIAMETER	80mm
FUEL LINE INLET DIAMETER	8mm
SEA WATER LINE INLET DIAMETER	32mm

FNM **HPEP 250** w/ Bravo X-1 stern drive

DISTANZIAT.	A	B	C
0	289 (11.37")	264 (10.39")	51°
1	274 (10.78")	286 (11.26")	46°
2	258 (10.15")	305 (12.00")	41°

Available also with Bravo Two and Bravo Three stern drives

10/2009

Instrument Panel

- VDO Oil pressure
- VDO Water temperature
- VDO Voltmeter
- VDO Rpm counter
- VDO Trim gauge
- 8 meter cable

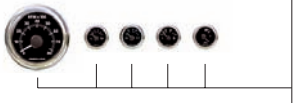

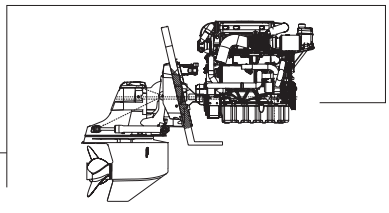

Accessories

Standard Package
- Bravo X-1 stern drive Red. 1,65:1
- Transom
- Set of flexible mounts
- Alternator 12 V – 105 A with built-in regulator
- Starter motor 12 V – 2,1 kW
- Oil and fuel filters
- Water-cooled exhaust manifold
- Bronze seawater pump
- Stainless steel seawater-cooled elbow
- High riser mixing and exhaust mixing elbows
- Original Mercruiser power steering system (complete)
- Racor filters
- Exhaust riser
- Instrument panel with 8 mt. cable and separate VDO gauges

Optional
- Dashboard single and double remote control
- CAN single and double remote control
- Stainless steel propellers for Bravo X-1
- Multiple Sterndrive Steering Tie Bar Arrangement
- Kit for boat internal heating
- 2 mt. auxiliary extension cable
- Flybridge instrument panel

Text and illustrations are not binding. CMD, owner of the FNM brand, reserves the right to introduce adaptations without prior notification.
Compliant with the RCD 2003/44/CE and EPA TIER 2 emission standards.